Edge

VENETO BATH

cod. 8E30011-VEN

Single hole lavatory faucet without pop-up drain

Features

- Solid brass construction
- **Finishing:** *11 // Chrome*
- **Flow Rate:** *1,72 GPM*
- **Cartridge:** *D=25mm open (cod. 01186)*
- Suitable for condensing boilers
- Complete with fixation set and hose m10x9/16f

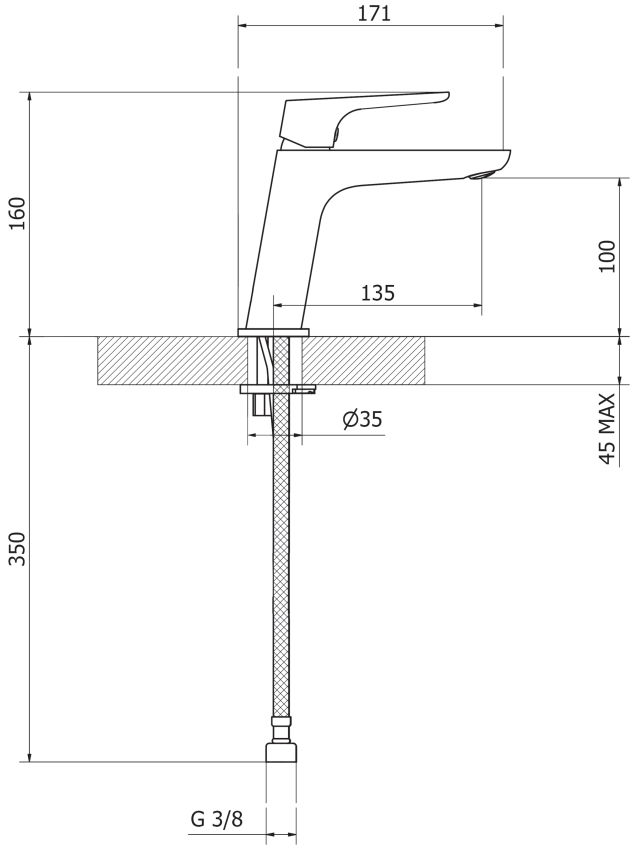

Flow Rate
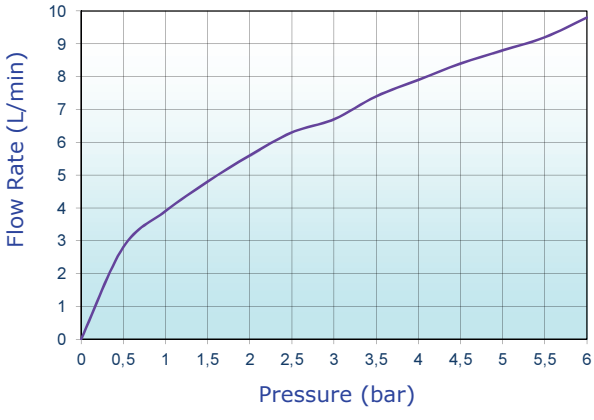
WTS GROUP water tech solutions