Diana

VENETO BATH

cod. 2J30011-VEN

Single hole lavatory faucet without pop-up drain

Features

- **Solid brass construction**
- **Finishing:** *11 // Chrome*
- **Flow Rate:** *3,70 GPM*
- **Cartridge:** *D=35mm long (cod. 01193)*
- **Suitable for condensing boilers**
- **Complete with fixation set and hose m10x9/16f**

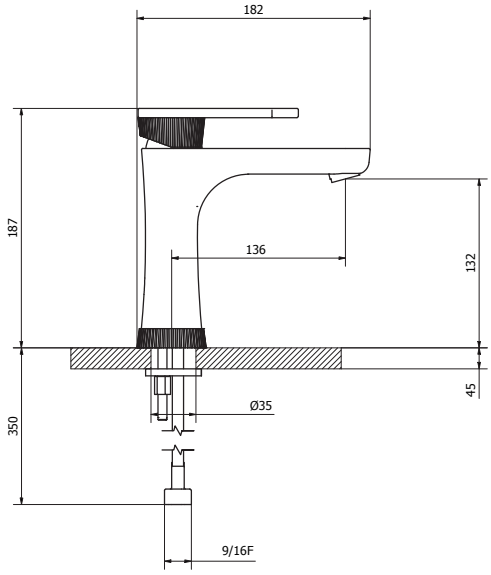

Flow Rate
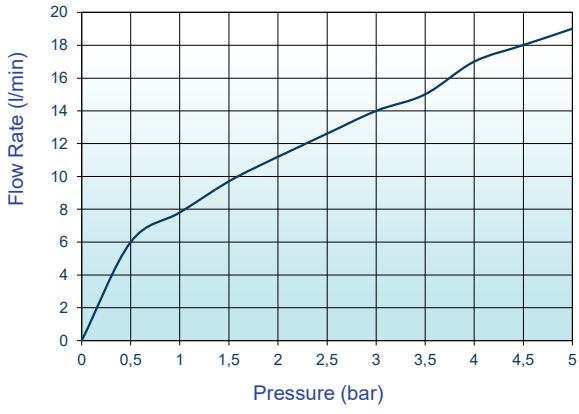
WTS GROUP water tech solutions