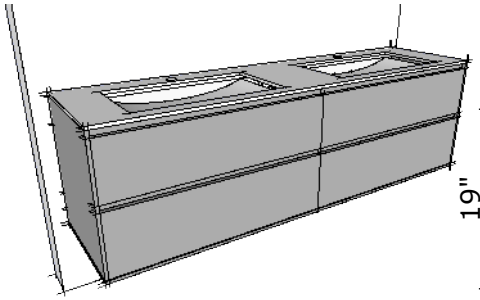

MODEL NAME: MC 1800J

PERSPECTIVE

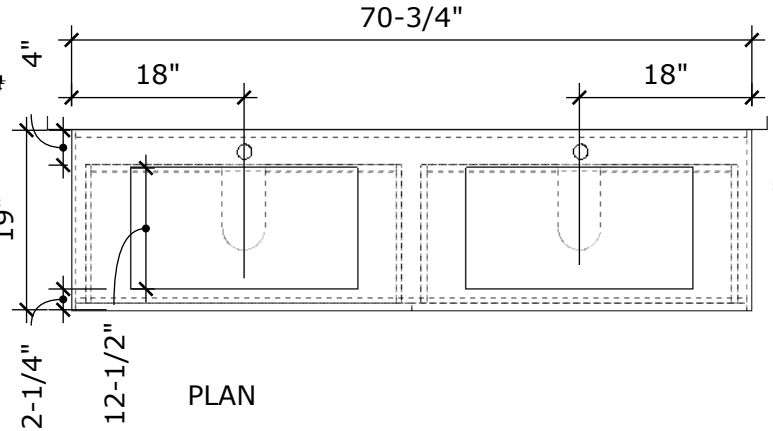

PLAN

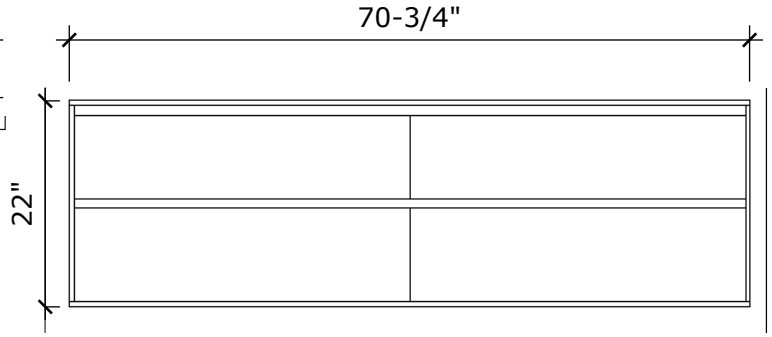

FRONT ELEVATION

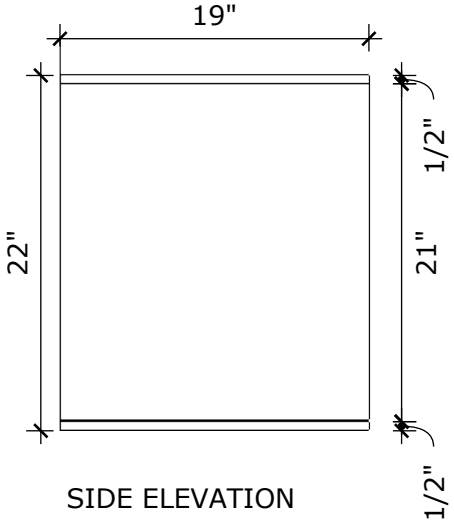

SIDE ELEVATION

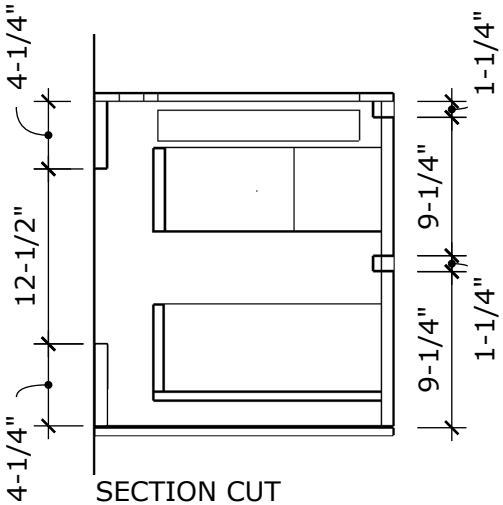

SECTION CUT

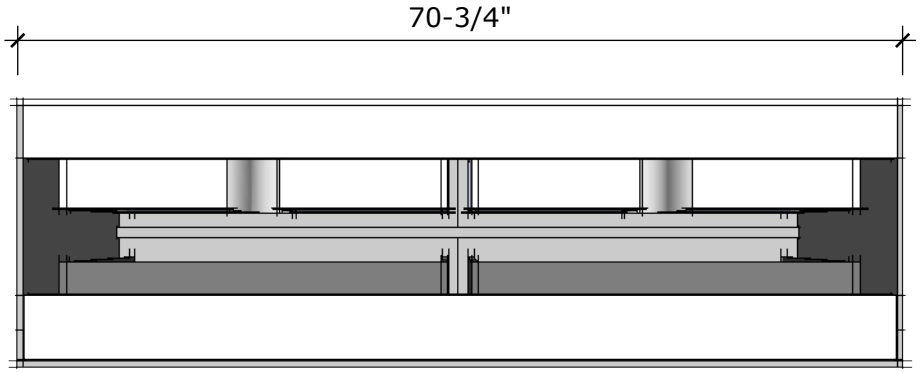

BACK VIEW